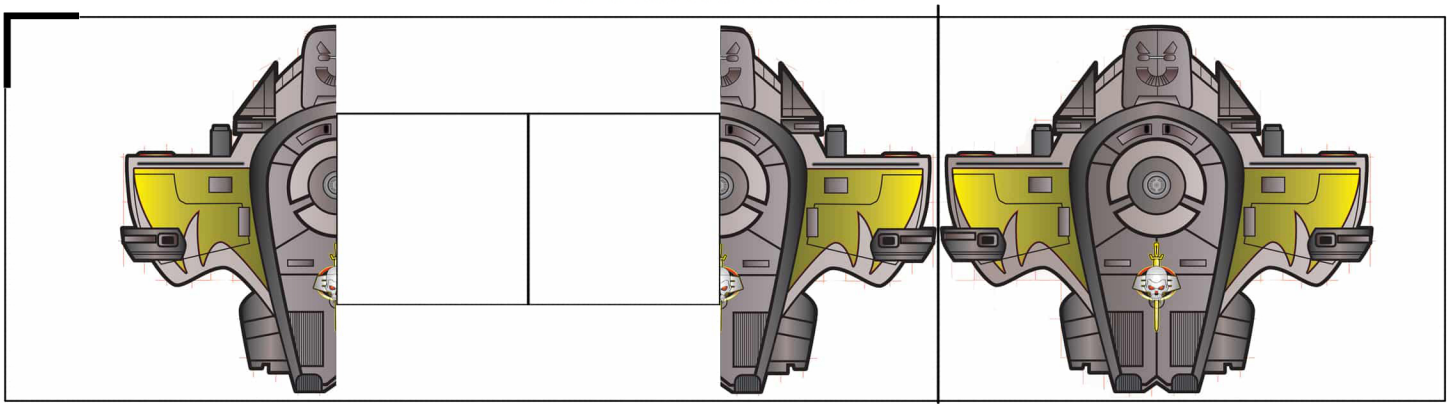

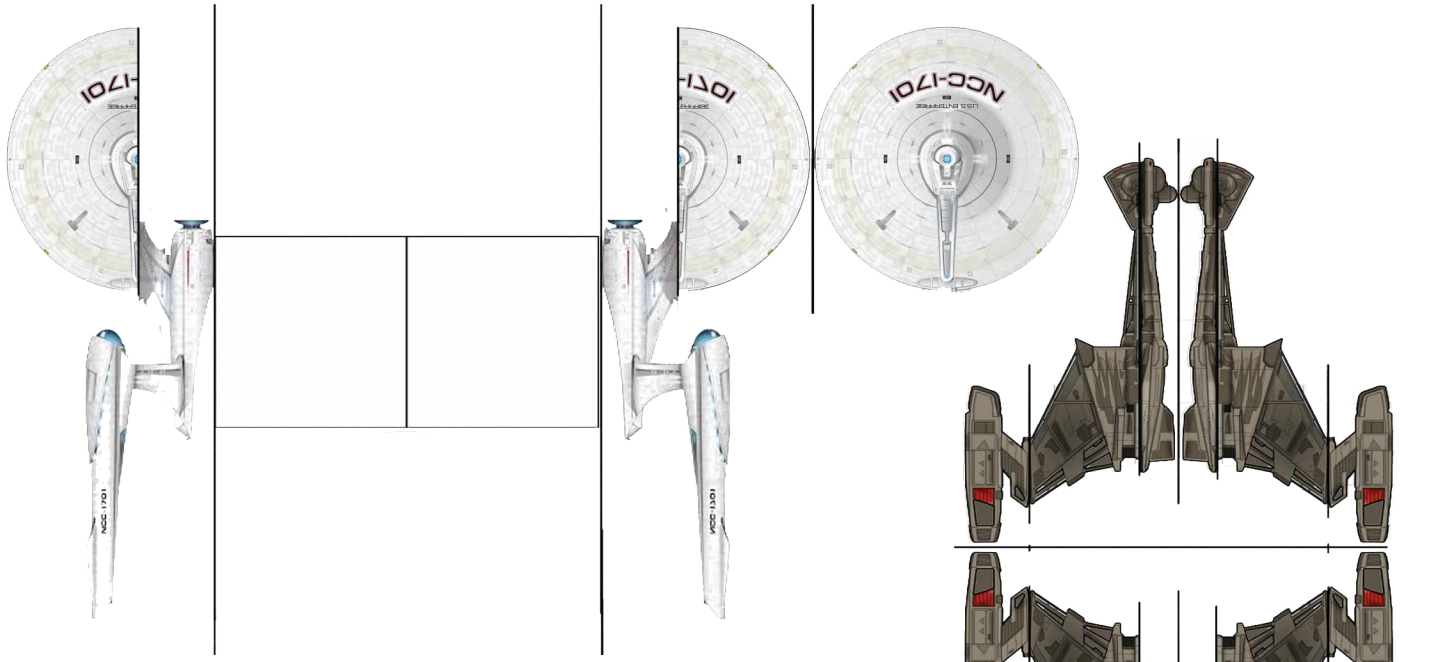
NCC-1701
NCC-1701
NCC-1701
NCC-1701

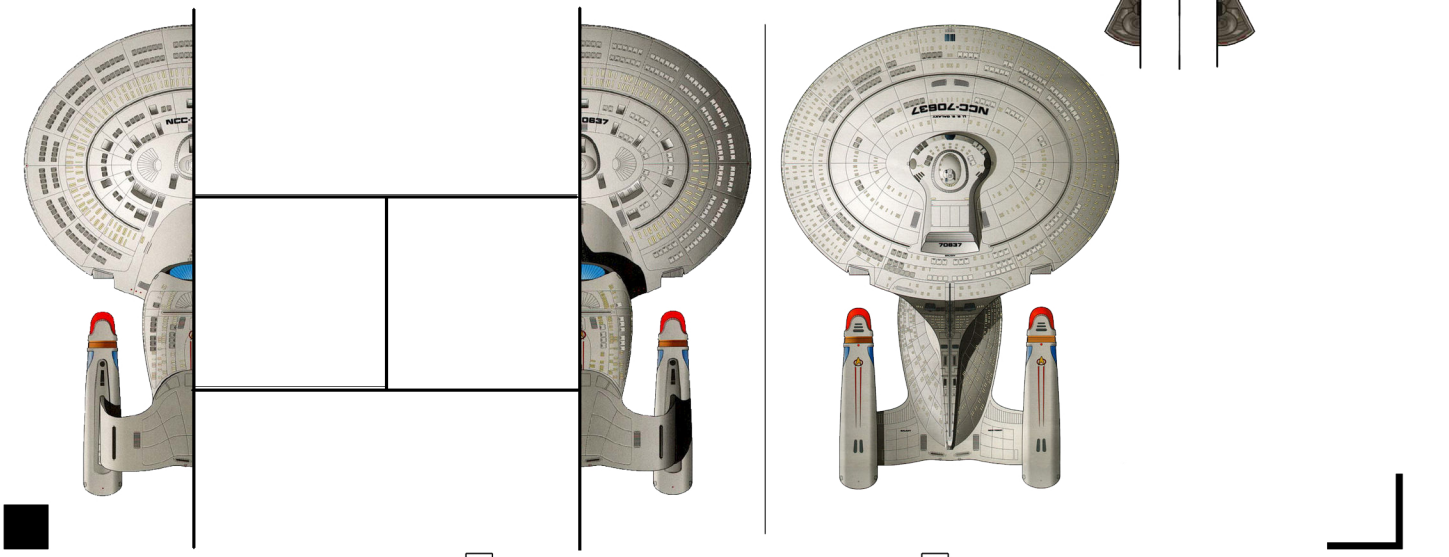
NCC-70637
70637